I R T Electronics Pty. Ltd. A.C.N. 000 832 575
26 Hotham Parade, ARTARMON. N.S.W. 2064 Australia
National: Phone: (02) 439 3744 Fax: (02) 439 7439
International: +61 2 439 3744 +61 2 439 7439

(Preliminary)

OPERATORS MANUAL

for the

VA-500/520/522
VA-551/570/572
VA-531/581
FIBRE OPTIC TRANSMISSION SYSTEM

IRT Communications
www.irtcommunications.com

1. GENERAL INFORMATION

The system is made up of single slot Eurocard modules designed to fit into the FR-700, FR-748 or the FR-722 chassis.
Each system consists of the following :

- VA-500 1300 nm laser transmitter (Single mode)
- VA-551 1300 nm PIN receiver
- VA-520 Vid/Aud Combiner & PSU
- VA-570 Vid/Aud Splitter & PSU
- VA-522 Dual Channel Audio Modulator .
- VA-572 Dual Channel Audio Demodulator.

Features:
All input and output signals (electronic and optical) are routed via rear assemblies attached to the modules.

Normal input to the transmitter is 1 Vp-p video. A monitor point on the front panel of the VA-520 presents a video signal of 1 Vp-p for signal monitoring and gain adjustment. (Note that the Audio sub-carrier of 100 mV p-p is also present at this monitor point.)The VA-500 transmitter also provides back porch clamping to ensure a high quality video signal at the optical transducer input.

The VA-570also provides video monitoring and gain adjustment at the front panel.

Audio modules provide audio input and output monitoring as well audio gain adjustment.

IRT Communications
www.irtcommunications.com

2.Specifications for the VA-500 Series

Due to our policy of continuing improvement, these specifications are subject to change without notice.

General:

Input power	28 Vac CT supplied from PT-700 (dual) or FR-722 (single)
Temperature range	0 - 50° C ambient
Mechanical	Suitable for mounting in IRT 19" rack chassis types FR-700, & FR-722 with input output and power connections on the rear panel
Dimensions	6 HP x 3U x 220 mm IRT Eurocard

Connectors:

Video input / output	BNC	
Audio input / output	Screw terminal:	PIN 1 - PIN 2 + PIN 3 GND
Power input	Connections dependent on power supply type.	
Optical input / output	DIN 47256	

The following performance data is for optical path losses specified under 12dB and with pre- emphasis and de-emphasis connected. Low Pass filters are inserted. Optimum system performance is achieved after a 15 Minute warm up period. Input is to the rear assembly **RB-520 VID IN.** Output is from the rear assembly **RB-570 VID. OUT.**

Video:- (at a video input level of 1V p-p.)

Insertion Gain	<±0.2 dB
Noise	
To CCIR Rec. 567-1	
Continuous random noise	<-63 dB RMS
Periodic noise	
Power supply hum (including harmonics)	<-45 dB
1 KHz to 5.5 MHz	<-60 dB
Overall gain	<Unity ±3 dB Adjustable from the VA-520 and 570 front panel
Frequency Response	±0.1 dB to 5 MHz ±0.5 dB to 10 MHz (no Audio)
Differential Gain at 4.43 MHz	<1.0%
Differential Phase at 4.43 MHz	<1.0%
Pulse to Bar K-factor	<=0.5%K
Luminance/Chrominance Inequality	
Delay	<20 ns
Gain	<2%

VA-520 video input characteristics:

Input Impedance:	75 Ω
Input Signal:	1Vp-p Video, synch negative..
Input common mode rejection	>40 dB

VA-570 video output characteristics:

Output Impedance	75 Ω

Vid. Mon. Output characteristics:

The outputs on both the VA-520 and VA-570 have a source impedance of 75 Ω. They are for signal monitoring and level adjustment purposes only. The VID. Mon. output on the VA-520 should be set at 1.0 Vp-p by adjusting the Video Gain control.

IRT Communications
www.irtcommunications.com

Audio:-

Input is to the rear assembly **RB-522 SK 3 and 4** balanced input.
Output is from rear assembly **RB-572 SK 3** and **4** balanced output

Frequency response	+0.15/-0.75 dB (30 Hz to 15 KHz)
Total harmonic distortion measured @:	
+17 dBm <4 KHz	
+14 dBm =>4 KHz	
30 Hz to 7.5 KHz	<0.2 %
Intelligible crosstalk ratio	>80 dB
Gain difference between channels:	
30 Hz to 10 KHz	<0.2 dB
10 KHz to 14 KHz	<0.4 dB
14 KHz to 15 KHz	<0.8 dB
Phase difference between channels:	
30 Hz to 4 KHz	<3.75°
14 KHz	<7.5°
15 KHz	<10°
Noise	<-52 dBm
Audio input impedance	600 Ω, balanced
Nominal input level	+8 dBm
Input gain range	±3 dB
Input common mode	>50 dB
Audio output impedance	approx. 40 Ω, balanced (aligned for load impedances of 600 Ω or greater.)
Nominal output level	+8 dBm
Output gain range	±3 dB

Optical input/output:-

Laser Wavelength 1300 nm

Launch Power

-10 dBm (Single mode cable)

Path Loss:

With PINAPD (VA-551) — Up to 12 dB path attenuation allowable to meet published specification.

IRT Communications
www.irtcommunications.com

3. Operational Adjustments:

VA-520

Input Gain.

The video input level has been factory aligned assuming that **1 Vp-p** video is present at the input to the **VA-520**. The signal level to the **VA-500** or **VA-502** must be properly set for the video channel noise and linearity specifications to be met. Therefore if the video level into the **VA-520** is different, the **VA-520** gain should be adjusted so that the **VID. MON**. output is 1 Vp-p .

Cable Equalisation.

If a long run of cable is used to feed the input to the transmitter then the **EQ.** should be adjusted to give a properly equalised video signal at the **VID. MON.** output on the **VA-520**

VA-570

Output Gain: The **GAIN** on the **VA-570** front panel should be adjusted so that the video signal at the **Vid. MON.** output is **1 Vp-p** .

AUDIO

As previously stated, the VA-500 Series can provide two channels of audio (VA-522, VA-572).

Input Level.

The audio input gain on the front panel of the **VA-522** module has been set for optimum performance and should not be adjusted. An audio level of +8 dBu will give an output level of -31 dBm into 600 Ω at the **AUDIO LEVEL MON.** points on the **VA-522** module.

Output Level

Audio Level adjustment can be performed, if necessary, using the **GAIN** adjustment on the **VA-572** module. The output level present at the **AUDIO LEVEL MON.** is the same as the output of the module but is unbalanced.

4. Monitor Point and Indicators

There are a number of indicators on the VA-500 Series that can aid fault detection:

ALL Modules

DC GREEN LED indicates the presence of ±12V on each module as appropriate.

VA-500

LASER ALARM RED LED indicates that the Laser output power is greater than -7 dBm or less than -13 dBm

VA-551

RX LOSS RED LED indicates that the received carrier level is not present or below the range of the AGC.
VID. FAIL RED LED indicates the absence of video on the demodulator output.

IRT Communications
www.irtcommunications.com

ADJUSTMENTS

Unless specified these adjustments are not field adjustable.

VA-500

C5 Video frequency response
C24 Video frequency response
C34 Video frequency response
C51 Video carrier frequency

RV3 Video gain preset
RV4 Modulator DC offset
RV5 Modulator linearity
RV6 2nd harmonic null
RV7 Laser drive.
RV8 Modulator temperature
RV9 Laser output power

LK1 Pre-emphasis on/off - normally linked
LK2 Video clamp on/off Clamped : link out
Not clamped : link installed

VA-520

RV1 Input common mode adjustment
RV2 Input cable equalisation (Front Panel Adjustment)
RV3 Video Output level (Front Panel Adjustment)

C5,7,9 Cable equaliser adjustment
C11 Video frequency response

Grounding P1/16a,b will remove the Video Low Pass Filter.

VA-522

RV1 AFC adjustment
RV2 Sub-carrier level
RV3 Audio deviation pre-set
RV4 Audio common mode null
RV5 Audio pre-emphasis adjust.
RV6 Audio frequency response
RV8 Audio level (Front Panel Adjustment)

L2 AFC adjustment
C4 Audio sub-carrier frequency
C42 Sub-carrier pass filter tuning

VA-551

RV1 AGC set
RV2 Vid gain pre-set

VA-570

RV1 Video output level (Front Panel Adjustment)
RV2 APD Avalanche set

Grounding P1/16a,b will remove the Video Low Pass Filter.

IRT Communications
www.irtcommunications.com

VA-572

RV1 De-emphasis adjust
RV3 Audio output DC offset
RV5 Audio output level (CH1) (Front Panel Adjustment)
RV6 Audio output level (CH2) (Front Panel Adjustment)

L1,2,3 Audio bandpass filter adjustments
L4,5 Audio de-modulator linearity

LK3 De-emphasis on/off Normally installed.

IRT Communications
www.irtcommunications.com

VA-531 DATA MODULATOR & VA-581 DATA DEMODULATOR.

The VA-531 Data Modulator and VA-581 Data Demodulator are a pair of Eurocard modules which offer the facility to transfer data in one direction over a link made up out of VA-500 Series Fibre Optic Video equipment.

They operate by frequency shift keying a sub-carrier, which can then be slotted above the video signal similar to the method used for FM sub-carrier Audio channels.

With the standard operating frequency and filters the data transfer rate for asynchronous operation is a maximum of 64kbit. For synchronous operation the data rate is exactly 192kbit.

Two interfaces are provided, one conforming to the "RS-232" standard and the other to the "RS-422" standard. The RS-232 input and output is via a 9 pin D connector and the RS-422 input and output is via a 15 pin D connector. Selection of the active signal input on the VA-531 Data Modulator is done by an internal link. In the asynchronous mode both the outputs from the VA-581 Data Demodulator are simultaneously available.

The special case of the synchronous 192Kbit mode is only available via the RS-422 connectors. In this mode the user provides data and clock and the VA-531 uses a Manchester code modulator to encode the transmitted signals. At the VA-581 a phase locked loop tuned to 4 x 192Kbit is used to extract the clock and data and make them available at the output.

SET-UP

RS-232 Mode.

VA-531
Data is applied to pin 3 of SK2.
Link 1 is set to 'A'
VA-581
Data is available on pin 2 of SK2

RS-422 Asynchronous Mode

VA-531
Data is applied to pin 4 (A) and pin 11 (B) of PL1.
Link 1 is set to 'B'.
VA-581
Data is available on pin 4 (A) and pin 11 (B) of PL1
LK3 is set to 'DIRECT'.

RS-422 Synchronous Mode

VA-531
Data is applied to pin 4 (A) and pin 11 (B) of PL1.
Link 1 is set to 'C'.
Clock is applied to pin 6 (A) and pin 13 (B) of PL1.
VA-581
Data is available on pin 4 (A) and pin 11 (B) of PL1
LK3 is set to 'RECLOCKED'.
Clock is available on pin 6 (A) and pin 13 (B) of PL1
'Data Present' is available on pin 5 (A) and pin 12 (B) of PL1.

Note : At startup, as a consequence of the Manchester encoding used, the Data output from the demodulator may be inverted until such time as the first 1>0 or 0>1 transition occurs in the input data stream.

ADJUSTMENTS

VA-531

RV1 sets the sub-carrier deviation.	(Nominally 800KHz)
C5 sets the sub-carrier centre frequency.	(Nominally 11.7MHz)
RV2 sets the sub-carrier output level.	(Nominally 100mV P-P but for Maxpro 240mV P-P)

VA-581

IRT Communications
www.itcommunications.com

RV1 sets the input level to the data demodulator chip (Nominally 30mV at U2 pin 15)
L6 sets the centre frequency of the demodulator circuit.
RV2 sets U7A period to 4.7uS.

The operating frequency can be changed by adjustment of C5 in the VA-531 and L6 in the VA-581 and the selection of the appropriate filters in both units.

IRT Communications
www.irtcommunications.com

DRAWINGS LIST

803647.1 VA-500/VA-551/VA-522/VA-572 Assemblies
803647.2 VA-500/VA-551/VA-522/VA-572 Interconnections

803503 VA-500 Optical Transmitter (Laser) 1300 nm
803527 RB-500 Rear Assembly

803512 VA-520 Vid/Aud Combiner & PSU
803525 RB-520 Rear Assembly

803790 VA-522 Dual Channel Audio Modulator
803529 RB-522 Rear Assembly

803508 VA-551 Optical Receiver (PIN) 1300 nm
803636 RB-550 Rear Assembly

803631 VA-570 Vid/Aud Splitter & PSU
803531 RB-570 Rear Assembly

803793 VA-572 Dual Channel Audio Demodulator
803638 RB-572 Rear Assembly

803591 VA-531 Data Modulator.
803598 VA-581 Data Demodulator.

803360 PT-700 Power Supply

IRT Communications
www.irtcommunications.com

VA-500 OPTICAL TRANSMITTER 1300nM

PCB ASSEMBLY 803503

RB-500 REAR ASSEMBLY

VA-551 OPTICAL RECEIVER 1300nM PIN

PCB ASSEMBLY 803508

803379 BB DEMODULATOR

RB-550 REAR ASSEMBLY

VA-520 VID/AUD COMBINER

PCB ASSEMBLY 803512

RB-520 REAR ASSEMBLY

VA-570 VID/AUD SPLITTER

PCB ASSEMBLY 803631

RB-570 REAR ASSEMBLY

VA-522 DUAL AUDIO MODULATOR

PCB ASSEMBLY 803642

RB-522 REAR ASSEMBLY

VA-572 DUAL AUDIO DE-MODULATOR

PCB ASSEMBLY 803643

803103 AUDIO LO PASS FILTER

803103 AUDIO LO PASS FILTER

RB-572 REAR ASSEMBLY

803112 VIDEO LO PASS FILTER

803112 VIDEO LO PASS FILTER

www.irtcommunications
IRT Communications
www.irtcommunications.com

21 01/05/14 / 01/01/94	© COPYRIGHT DO NOT COPY NOR DISCLOSE TO ANY THIRD PARTY WITHOUT WRITTEN CONSENT	IRT	
	DRAWN RBB	SIZE	TITLE VA-500/VA-551 ASSEMBLIES
	CHECKED	SCALE	DRAWING No. 803647 — SHEET 1 OF 1
	ENG. APP.		
	CONTRACT No.	IRT Electronics Pty. Ltd. ARTARMON NSW AUSTRALIA 2064	

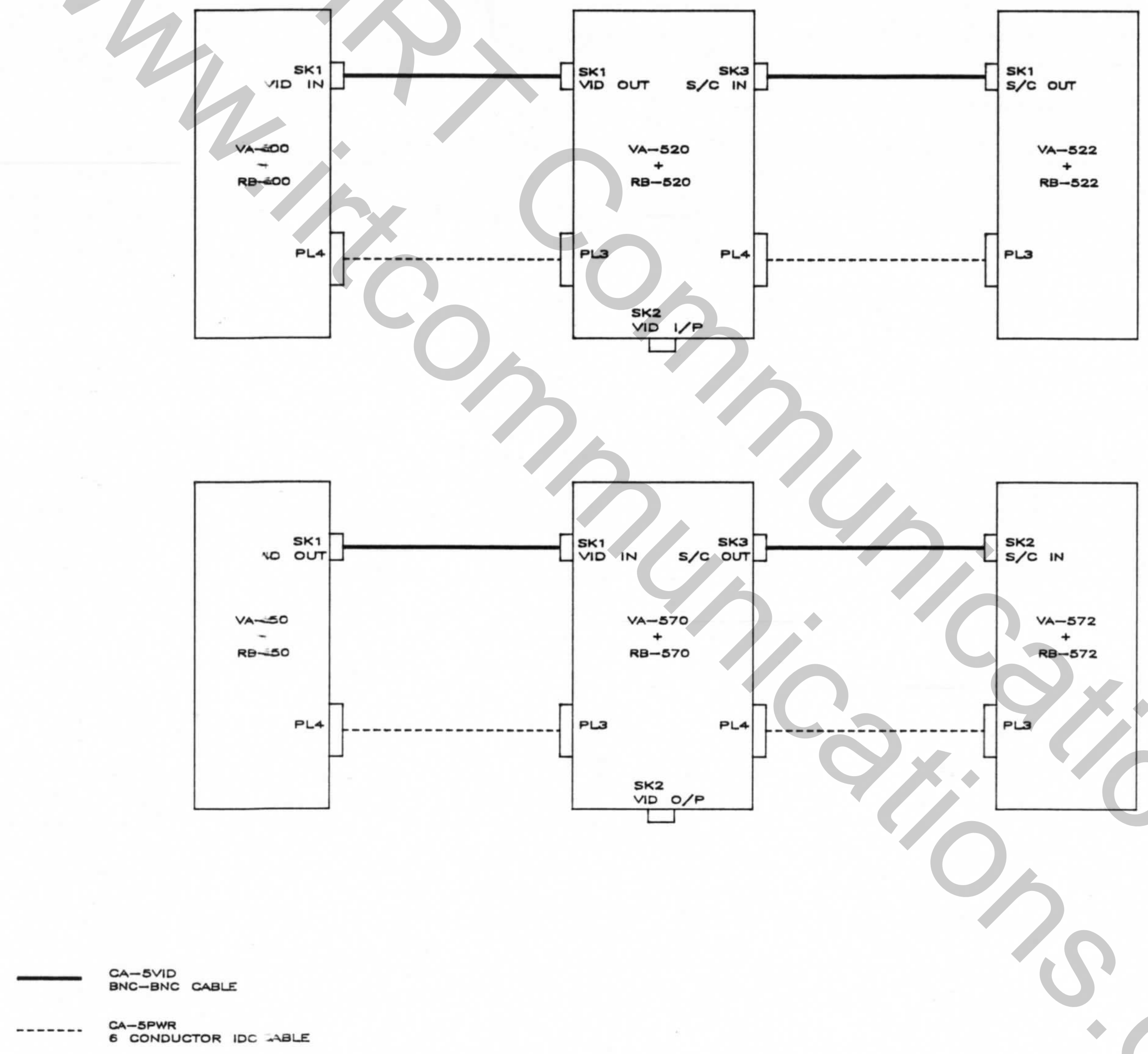

1	© COPYRIGHT DO NOT COPY NOR DISCLOSE TO ANY THIRD PARTY WITHOUT WRITTEN CONSENT	IRT		
10/10/94		SIZE	TITLE VA500/VA551 INTERCONNECTIONS	
	DRAWN RBB			
	CHECKED	SCALE	DRAWING No. 803647	SHEET 2 OF 2
	ENG. APP.			
	CONTRACT No.	IRT Electronics Pty. Ltd. ARTARMON NSW AUSTRALIA 2064		

IRT Communications
www.irtcommunications.com

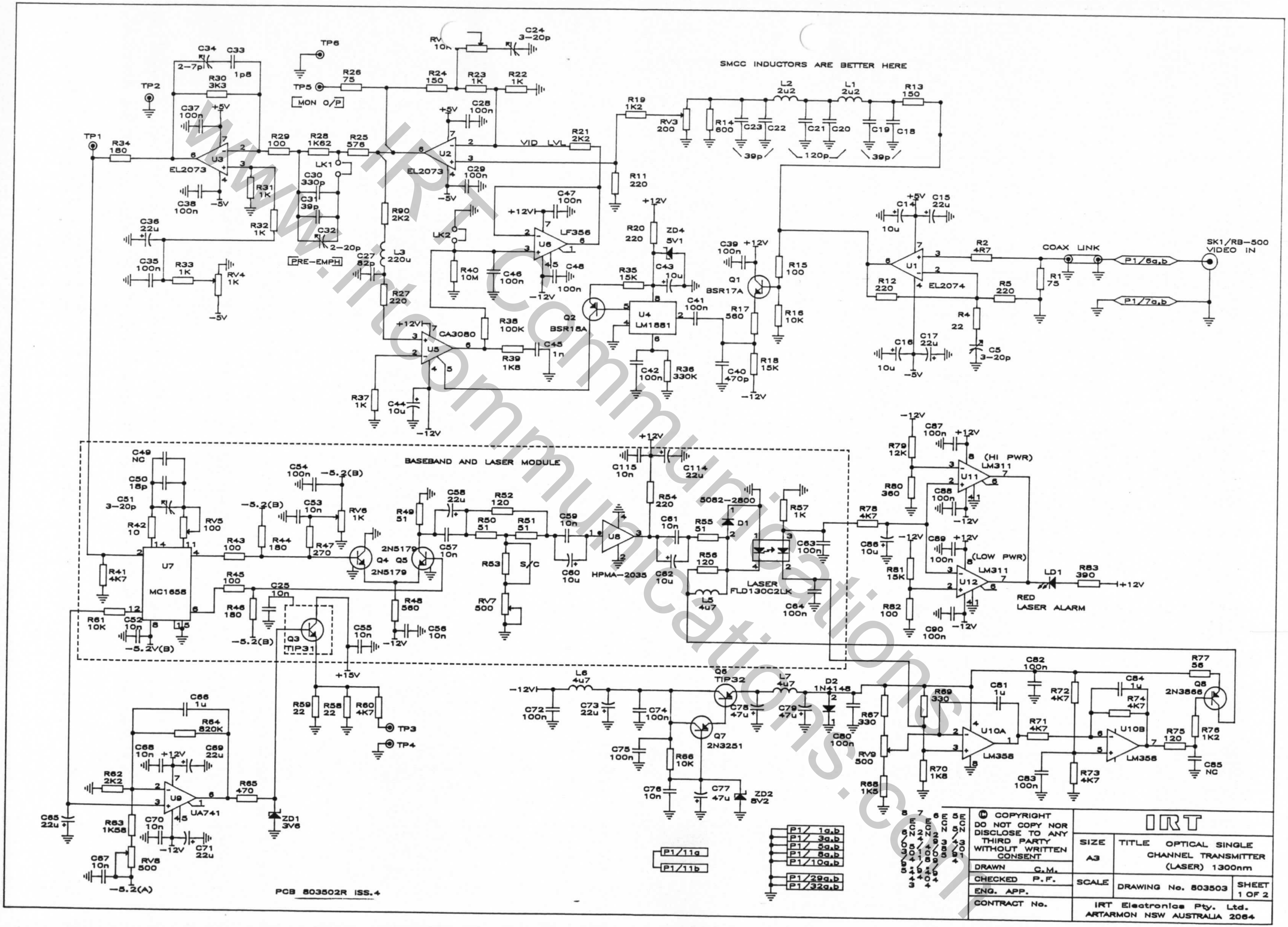

www.irtcommunications.com
www.irtcommunications.com

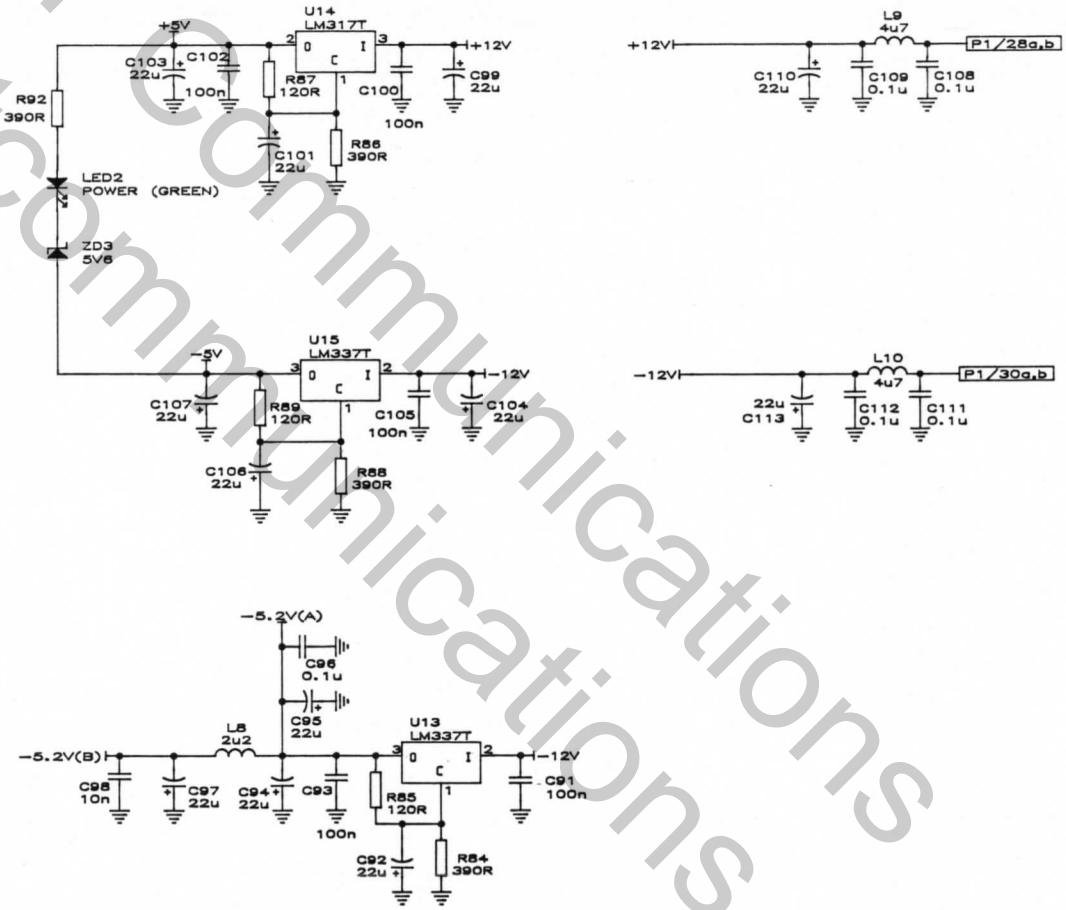

IRT Communications
www.irtcommunications.com

© COPYRIGHT
DO NOT COPY NOR DISCLOSE TO ANY THIRD PARTY WITHOUT WRITTEN CONSENT

IRT

DRAWN C.M.	SIZE A3	TITLE OPTICAL SINGLE CHANNEL TRANSMITTER (LASER) 1300nm POWER INPUTS
CHECKED P.F.	SCALE	DRAWING No. 803503 — SHEET 2 OF 2
ENG. APP.		
CONTRACT No.	IRT Electronics Pty. Ltd. ARTARMON NSW AUSTRALIA 2064	

2	5/3/94	
3	9/8/94	
4	4/10/95	

PCB 803502 ISS.3

FILTER ASSEMBLIES:

803112
803490
803023 ISS 3 AND HIGHER

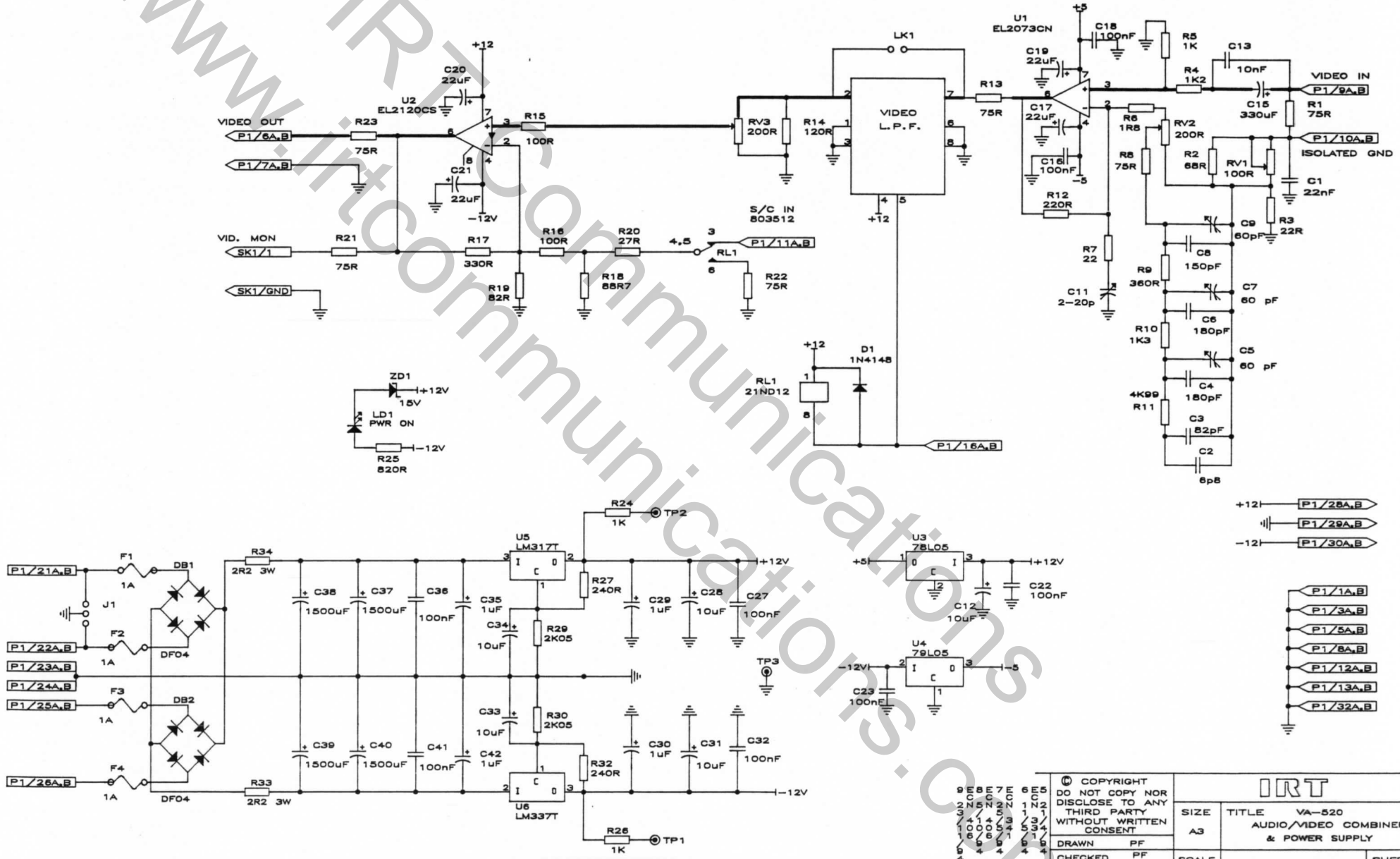

PCB 803511 ISS4

© COPYRIGHT
DO NOT COPY NOR DISCLOSE TO ANY THIRD PARTY WITHOUT WRITTEN CONSENT

DRAWN	PF	
CHECKED	PF	
ENG. APP.		
CONTRACT No.		

IRT

SIZE A3	TITLE VA-520 AUDIO/VIDEO COMBINER, & POWER SUPPLY	
SCALE	DRAWING No. 803512	SHEET 1 OF 1

IRT Electronics Pty. Ltd.
ARTARMON NSW AUSTRALIA 2064

IRT Communications
www.irtcommunications.com

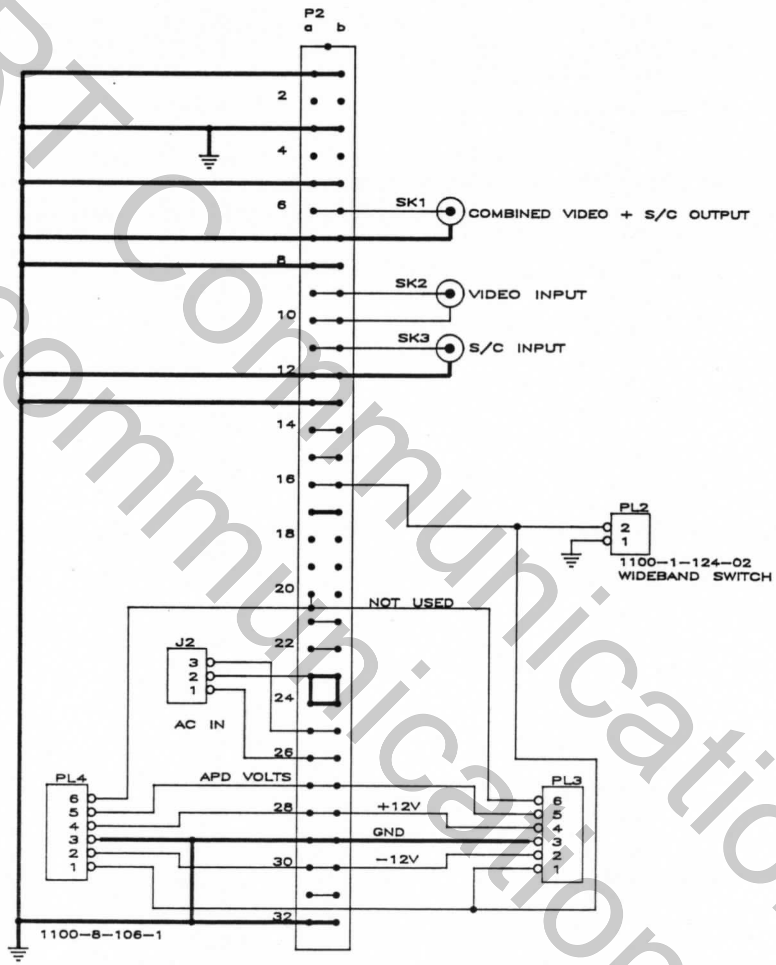

PCB 803524 ISS 4

© COPYRIGHT DO NOT COPY NOR DISCLOSE TO ANY THIRD PARTY WITHOUT WRITTEN CONSENT	IRT	
DRAWN PF	SIZE A3	TITLE RB-520 REAR ASSEMBLY FOR VA-520 PS/COMBINER
CHECKED	SCALE	DRAWING No. 803525 — SHEET 1 OF 1
ENG. APP.		
CONTRACT No.		IRT Electronics Pty. Ltd. ARTARMON NSW AUSTRALIA 2064

IRT Communications
www.irtcommunications.com

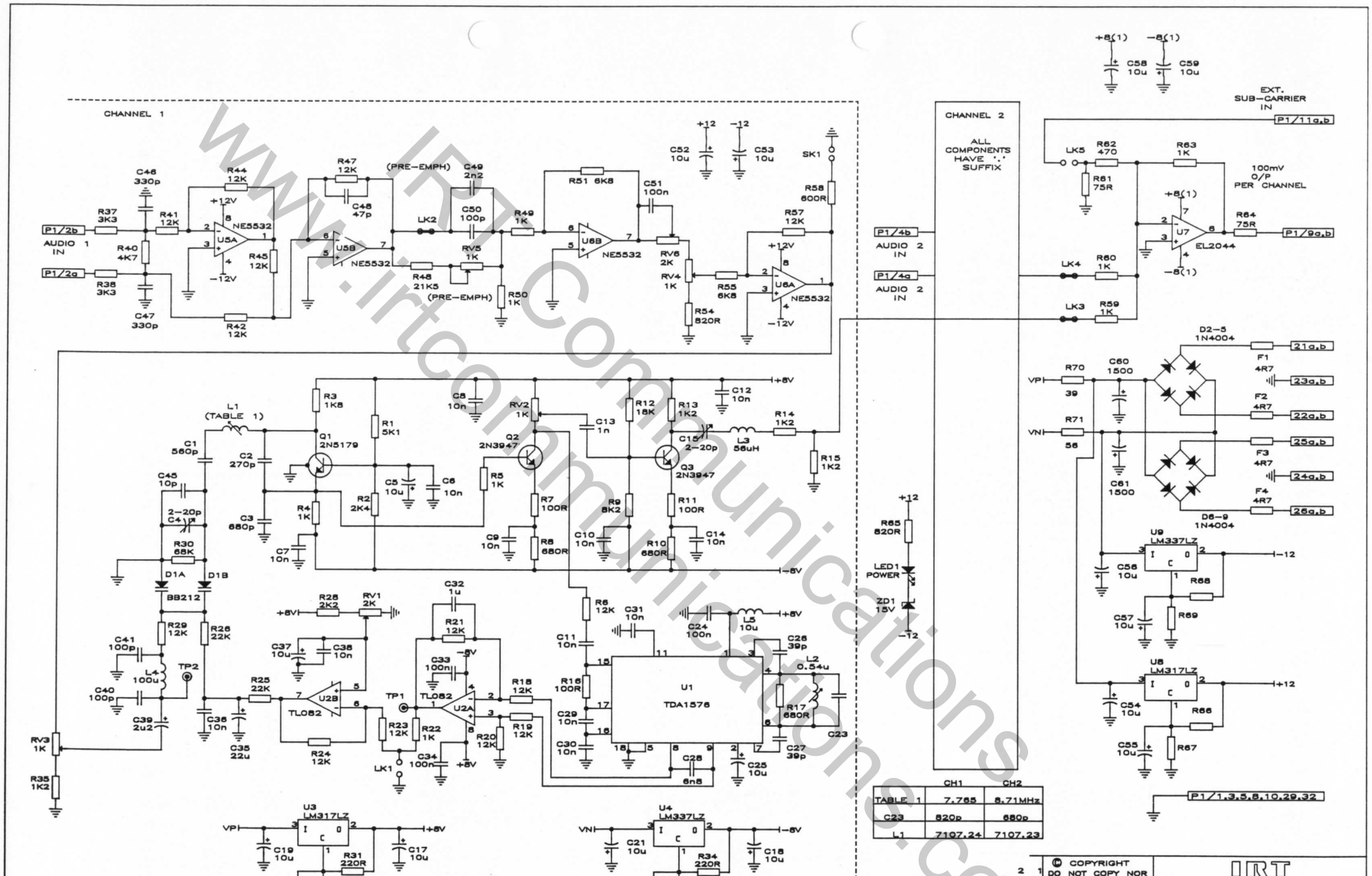

	CH1	CH2
TABLE 1	7.765	8.71MHz
C23	820p	680p
L1	7107.24	7107.23

© COPYRIGHT DO NOT COPY NOR DISCLOSE TO ANY THIRD PARTY WITHOUT WRITTEN CONSENT

IRT

SIZE A3	TITLE DUAL CHANNEL AUDIO MODULATOR (28VAC POWER)	
DRAWN RBB		
CHECKED	SCALE	DRAWING No. 803790	SHEET 1 OF 1
ENG. APP.		
CONTRACT No.	IRT Electronics Pty. Ltd. ARTARMON NSW AUSTRALIA 2064	

IRT Communications www.irtcommunications.com

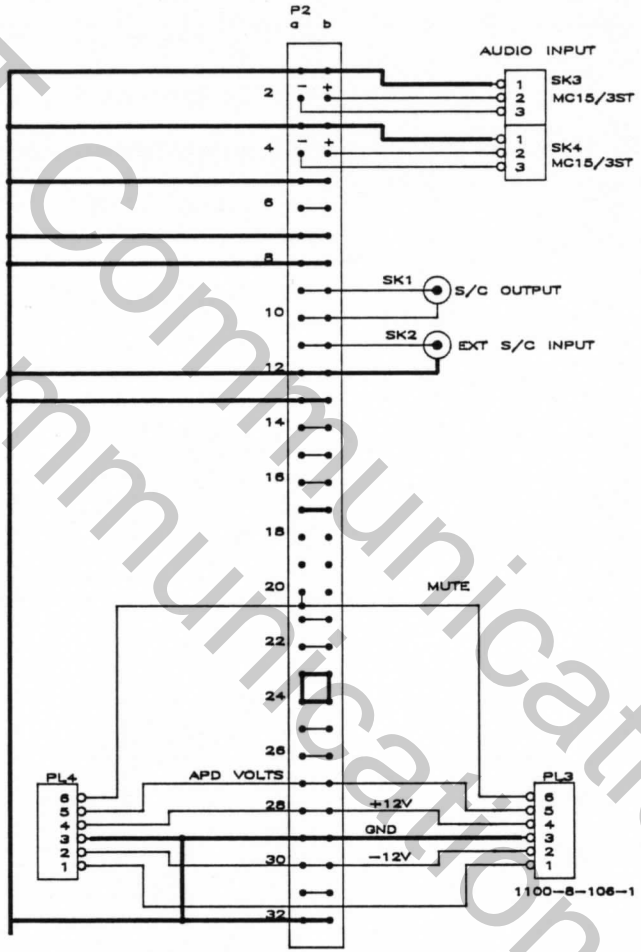

IRT Communications
www.irtcommunications.com

© COPYRIGHT
DO NOT COPY NOR DISCLOSE TO ANY THIRD PARTY WITHOUT WRITTEN CONSENT

DRAWN PF
CHECKED
ENG. APP.
CONTRACT No.

IRT

SIZE A3

TITLE RB−522
REAR ASSEMBLY FOR
VA−522
DUAL AUDIO MODULATOR

SCALE

DRAWING No. 803529

SHEET 1 OF 1

IRT Electronics Pty. Ltd.
ARTARMON NSW AUSTRALIA 2064

PCB 803528 ISS 4

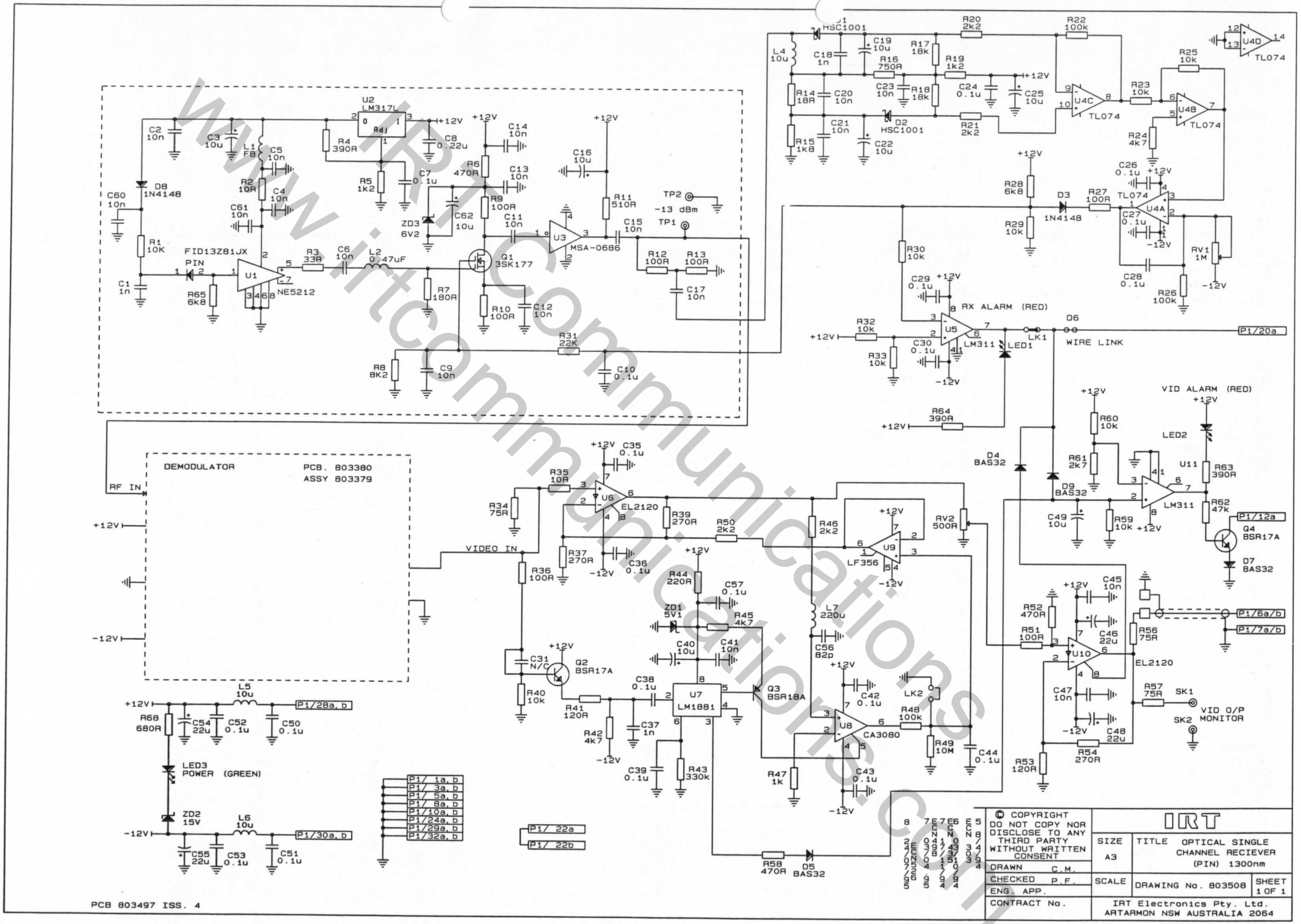

IRT Communications
www.irtcommunications.com.au

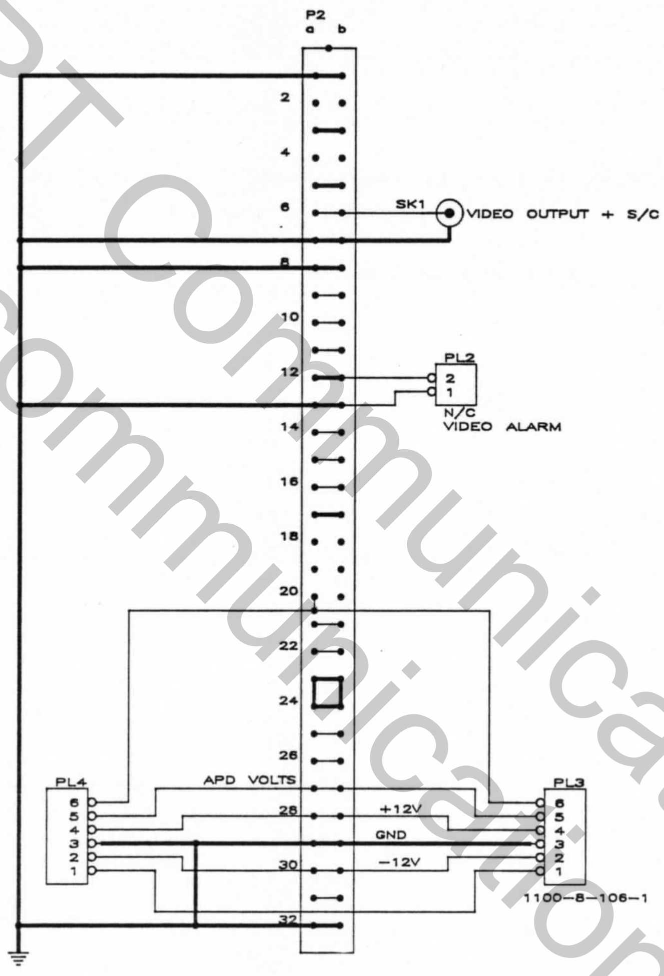

© COPYRIGHT DO NOT COPY NOR DISCLOSE TO ANY THIRD PARTY WITHOUT WRITTEN CONSENT	IRT		
	SIZE A3	TITLE RB-550 REAR ASSEMBLY FOR VA-550 OPTICAL RECEIVER	
DRAWN PF			
CHECKED	SCALE	DRAWING No. 803636	SHEET 1 OF 1
ENG. APP.			
CONTRACT No.	IRT Electronics Pty. Ltd. ARTARMON NSW AUSTRALIA 2064		

PCB 803635 ISS 1

IRT Communications
www.irtcommunications.com

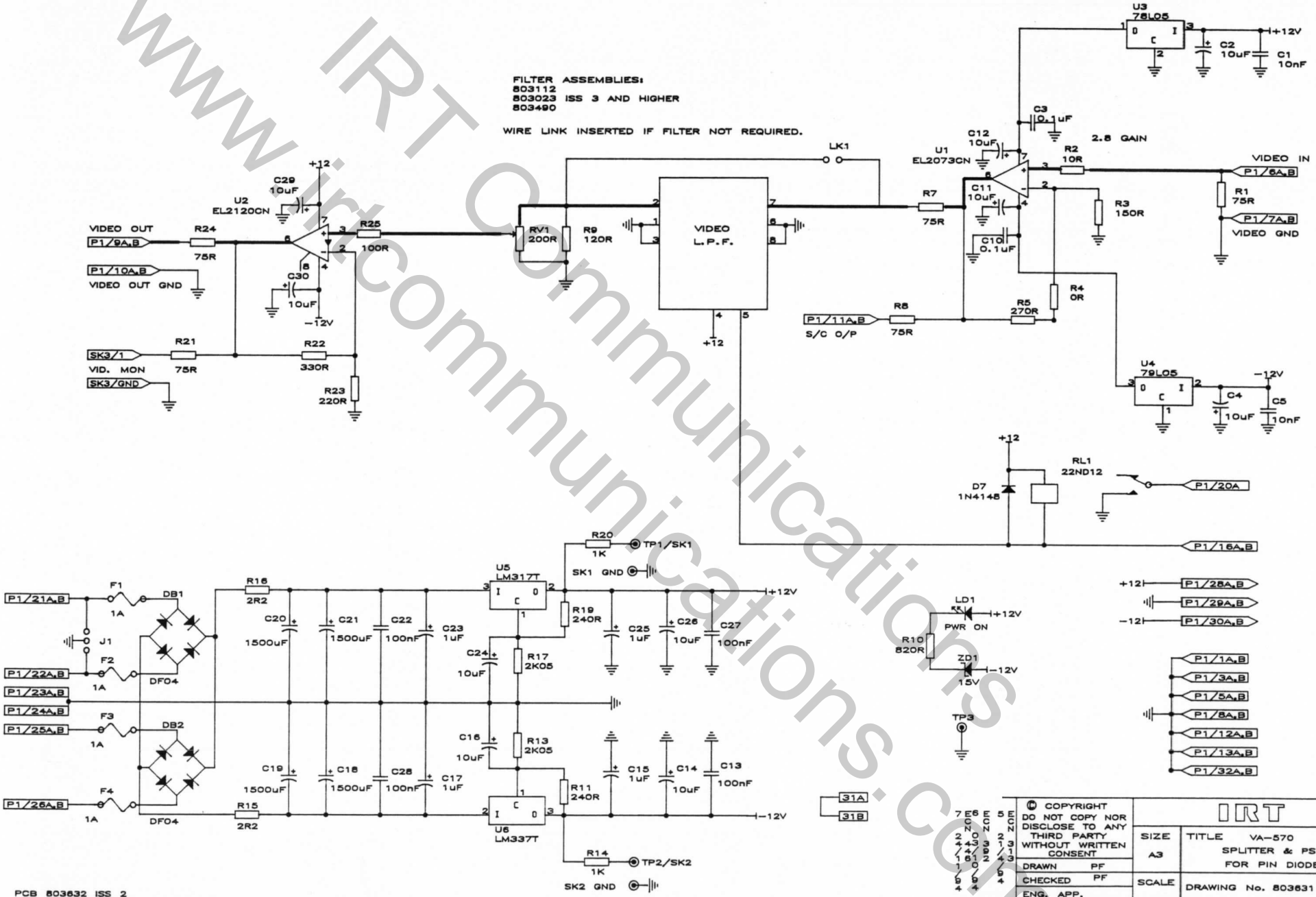

IRT Communications
www.irtcommunications.com

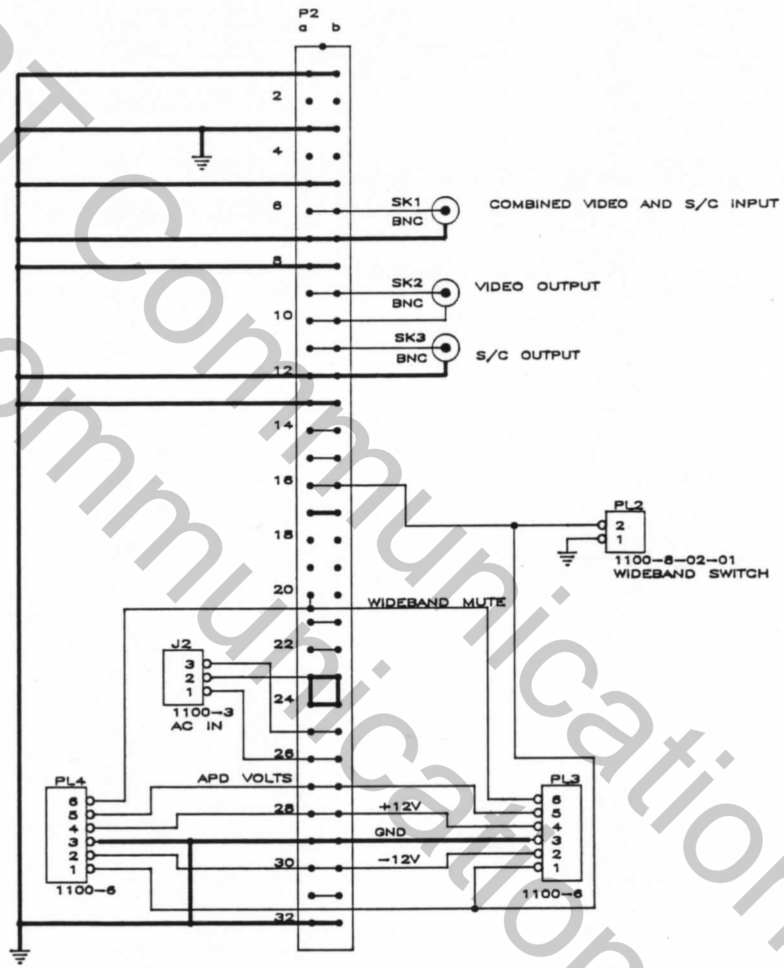

© COPYRIGHT
DO NOT COPY NOR DISCLOSE TO ANY THIRD PARTY WITHOUT WRITTEN CONSENT

DRAWN	PF
CHECKED	
ENG. APP.	
CONTRACT No.	

IRT

SIZE	TITLE RB-570 REAR ASSEMBLY FOR VA-570 PS/SPLITTER	
A3		
SCALE	DRAWING No. 803531	SHEET 1 OF 1

IRT Electronics Pty. Ltd.
ARTARMON NSW AUSTRALIA 2064

PCB 803530 ISS 2

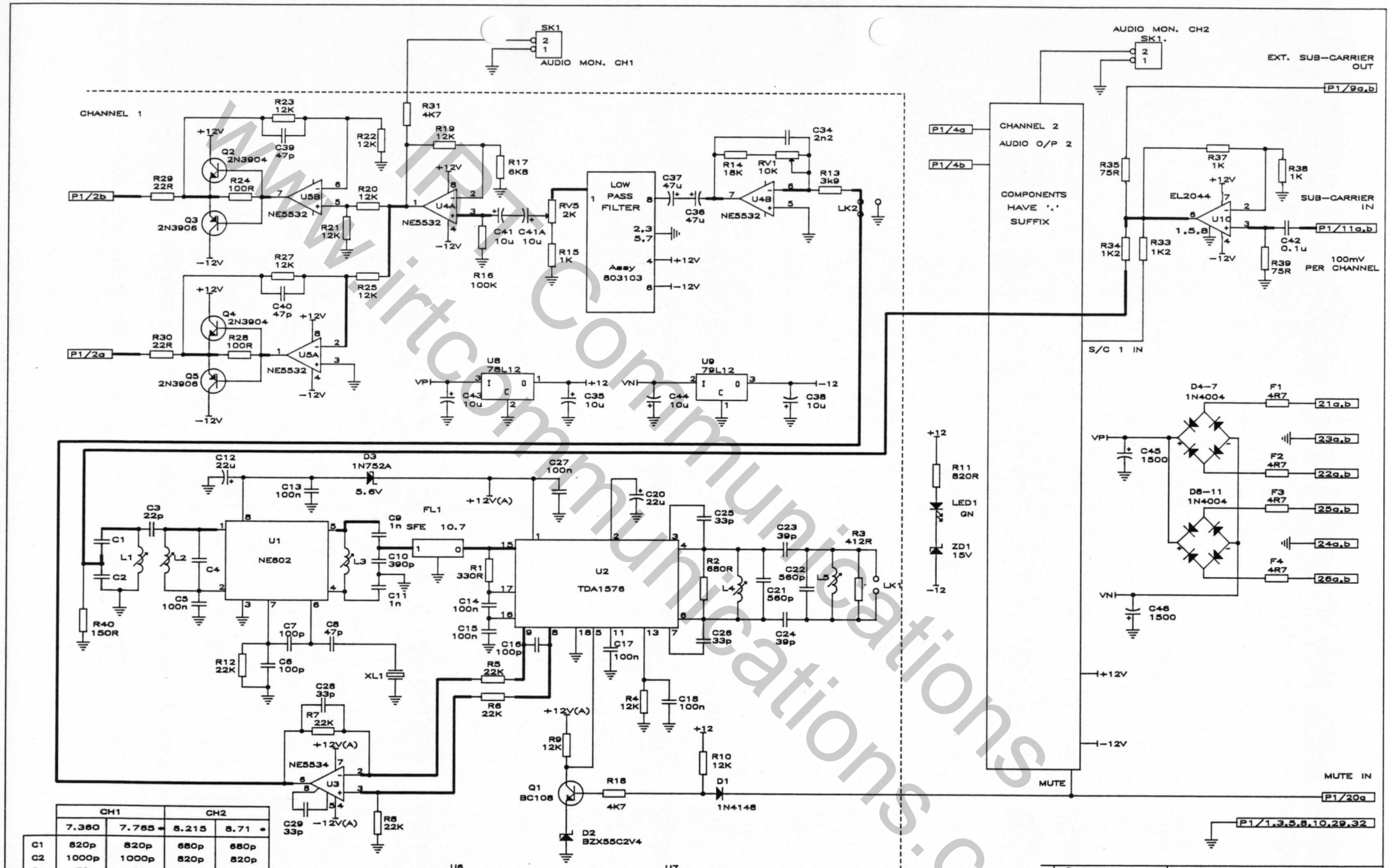

	CH1		CH2	
	7.360	7.765 *	8.215	8.71 *
C1	820p	820p	680p	680p
C2	1000p	1000p	820p	820p
C4	470p	470p	390p	390p
FL1	10.70	10.70	10.72	10.72
XL1	18.06	18.465	18.935	19.43

CH1 & CH2 IF frequencies must be separated by 20KHz or more.

* Standard 2 channel frequencies.

PCB 803794R

© COPYRIGHT DO NOT COPY NOR DISCLOSE TO ANY THIRD PARTY WITHOUT WRITTEN CONSENT

IRT

SIZE A3	TITLE DUAL CHANNEL AUDIO DEMODULATOR 28VAC VERSION
DRAWN RBB	
CHECKED PF	
ENG. APP.	
SCALE	DRAWING No. 803793
SHEET 1 OF 1	
CONTRACT No.	IRT Electronics Pty. Ltd. ARTARMON NSW AUSTRALIA 2064

IRT Communications www.irtcommunications.com

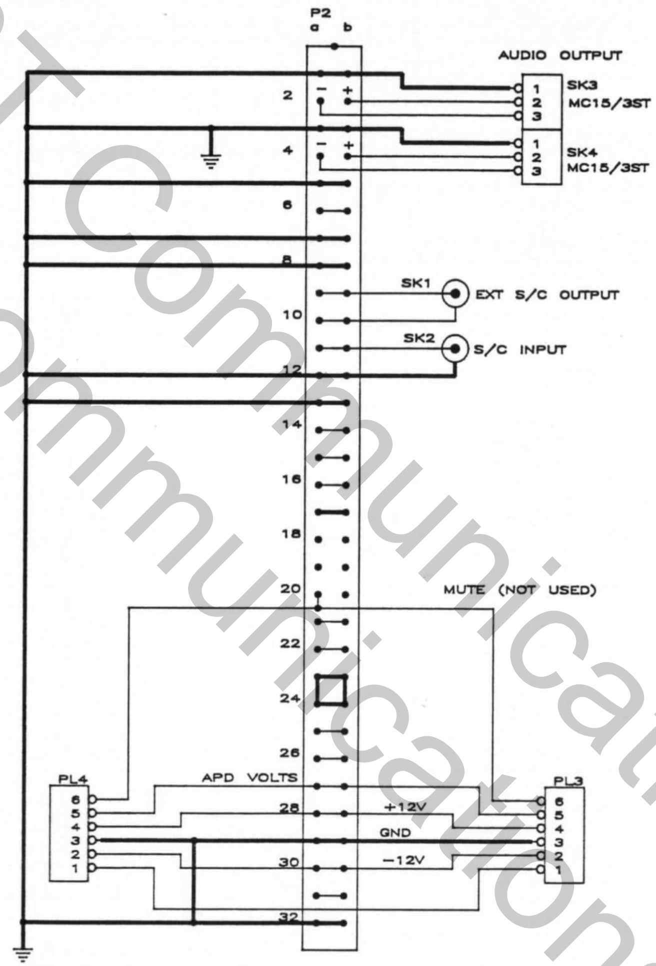

IRT Communications
www.irtcommunications.com

PCB 803637 ISS 1

© COPYRIGHT
DO NOT COPY NOR DISCLOSE TO ANY THIRD PARTY WITHOUT WRITTEN CONSENT

DRAWN PF	SIZE A3	TITLE RB-572 REAR ASSEMBLY FOR VA-572 DUAL AUDIO DEMODULATOR	
CHECKED	SCALE	DRAWING No. 803638	SHEET 1 OF 1
ENG. APP.			
CONTRACT No.	IRT Electronics Pty. Ltd. ARTARMON NSW AUSTRALIA 2064		

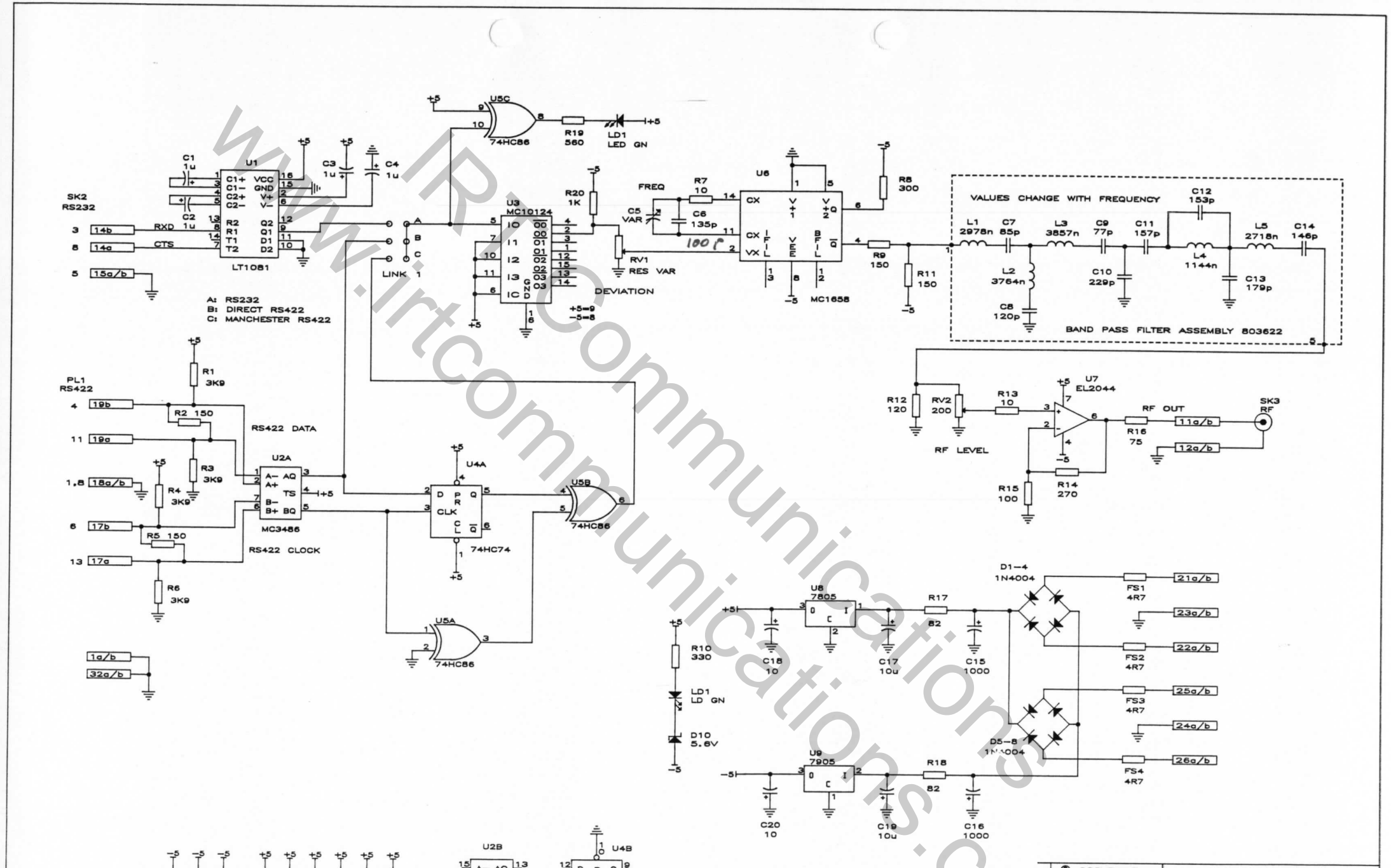

IRT Communications
www.irtcommunications.com

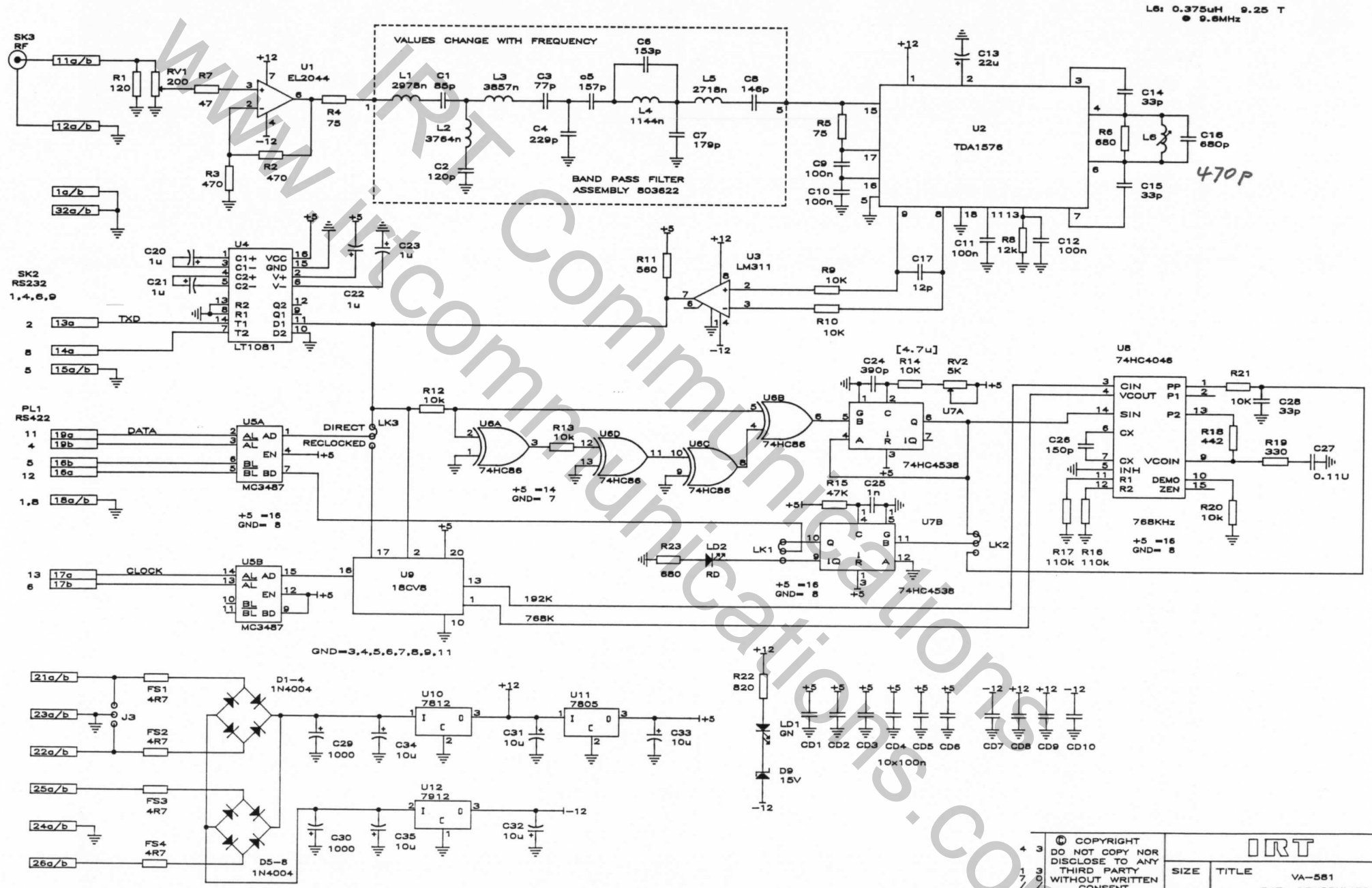

© COPYRIGHT
DO NOT COPY NOR DISCLOSE TO ANY THIRD PARTY WITHOUT WRITTEN CONSENT

IRT

SIZE	TITLE VA-581 DATA DEMODULATOR
DRAWN RBB	
CHECKED	SCALE / DRAWING No. 803598 / SHEET 1 OF 1
ENG. APP.	
CONTRACT No.	IRT Electronics Pty. Ltd. ARTARMON NSW AUSTRALIA 2064

PCB 803599

IRT Communications
www.irtcommunications.com

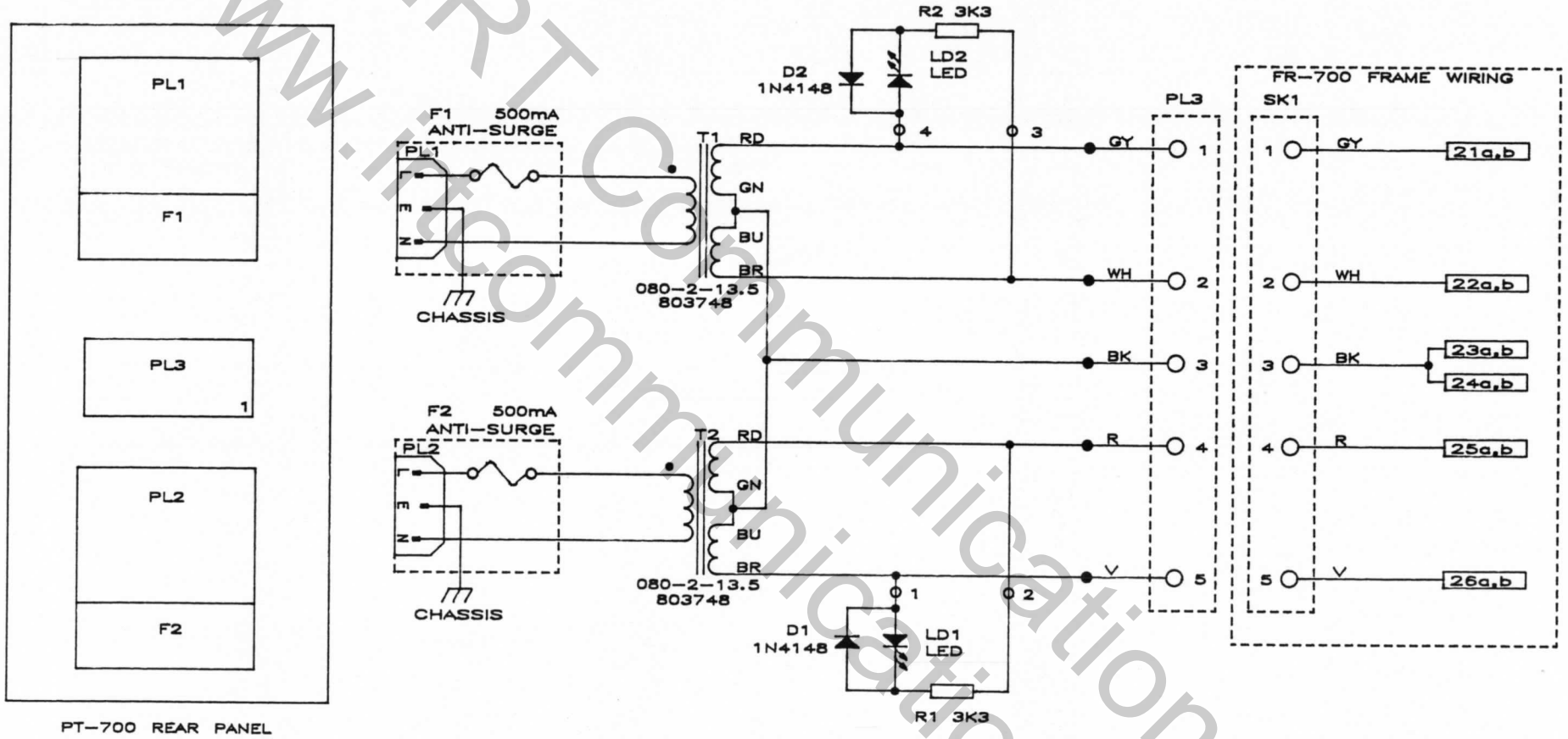

© COPYRIGHT
DO NOT COPY NOR DISCLOSE TO ANY THIRD PARTY WITHOUT WRITTEN CONSENT

DRAWN K.N.
CHECKED
ENG. APP.
CONTRACT No.

IRT

SIZE A4

TITLE PT-700 POWER SUPPLY WITH FR-700 CONNECTIONS

SCALE

DRAWING No. 803360

SHEET 2 OF 2

IRT Electronics Pty. Ltd.
ARTARMON NSW AUSTRALIA 2064

IRT Communications
www.irtcommunications.com